BILL NO. S-86-02-12

SPECIAL ORDINANCE NO. S- 24-86

AN ORDINANCE approving City Utilities Purchase Order #A-52555, by the City of Fort Wayne, Indiana, by and its Department of Purchasing and the Water Products Company, for the Water and Maintenance and Service Department.

NOW, THEREFORE, BE IT ORDAINED BY THE COMMON COUNCIL OF THE CITY OF FORT WAYNE, INDIANA:

SECTION 1. That City Utilities Purchase Order #A-52555, between the City of Fort Wayne, by and through its City Utilities, and the Department of Purchasing and the Water Products Company, for the Water and Maintenance and Service Department, respectfully for:

> the purchase of fire hydrants for the Water Maintenance and Service Department, per the specifications in Reference #765;

involving a total cost of Twenty-Eight Thousand Eight Hundred Ninety-Five and 50/100 Dollars ($28,895.50), all as more particularly set forth in said Purchase Order and Reference #765, which are on file in the Office of the Department of Purchasing, and are by reference incorporated herein, made a part hereof, and are hereby in all things ratified, confirmed and approved.

SECTION 2. That this Ordinance shall be in full force and effect from and after its passage and any and all necessary approval by the Mayor.

Councilmember

APPROVED AS TO FORM
AND LEGALITY

Bruce O. Boxberger, City Attorney

Read the first time in full and on motion by Burns, seconded by Eisbart, and duly adopted, read the second time by title and referred to the Committee City Utilities (and the City Plan Commission for recommendation) and Public Hearing to be held after due legal notice, at the Council Chambers, ~~City-County Building~~, Fort Wayne Indiana, on _____, the _____ day of _____, 19____, at _____ o'clock ___.M.,E.S

DATE: 2-11-86

Sandra E. Kennedy
SANDRA E. KENNEDY, CITY CLERK

Read the third time in full and on motion by Burns, seconded by Stier, and duly adopted, placed on its passage. PASSED (~~LOST~~) by the following vote:

| | AYES | NAYS | ABSTAINED | ABSENT | TO-WIT: |
|---|---|---|---|---|---|
| TOTAL VOTES | 9 | | | | |
| BRADBURY | ✓ | | | | |
| BURNS | ✓ | | | | |
| EISBART | ✓ | | | | |
| GiaQUINTA | ✓ | | | | |
| HENRY | ✓ | | | | |
| REDD | ✓ | | | | |
| SCHMIDT | ✓ | | | | |
| STIER | ✓ | | | | |
| TALARICO | ✓ | | | | |

DATE: 2-25-86

Sandra E. Kennedy
SANDRA E. KENNEDY, CITY CLERK

Passed and adopted by the Common Council of the City of Fort Wayne, Indiana, as (~~ANNEXATION~~) (~~APPROPRIATION~~) (~~GENERAL~~) (SPECIAL) (~~ZONING MAP~~) ORDINANCE (RESOLUTION) NO. R-24-86 on the 25th day of February, 19 86,

ATTEST: Sandra E. Kennedy
SANDRA E. KENNEDY, CITY CLERK

(SEAL) Samuel J. Talarico
PRESIDING OFFICER

Presented by me to the Mayor of the City of Fort Wayne, Indiana, on the 26th day of February, 19 86, at the hour of 2:30 o'clock P.M.,E.S.T.

Sandra E. Kennedy
SANDRA E. KENNEDY, CITY CLERK

Approved and signed by me this 3rd day of March, 19 86, at the hour of 2nd o'clock P.M.,E.S.T.

WIN MOSES, JR., MAYOR

BID REFERENCE TAB SHEET #765
FIRE HYDRANTS
OPENS: JANUARY 7, 1985 AT 10:30 A.M.

| | 5½'BURY | 4½' BURY | BRAND NAME | DEL/TIME |
|---|---|---|---|---|
| WATEROUS | $460.56 | $444.24 | WATEROUS | 6 WEEKS |
| MUELLER | $519.76 | $497.48 | MUELLER | 3-4 WEEKS |
| WATER PRODUCTS | $484.10 | $469.05 | AM DARLING | 1-4 WEEKS |
| UNDERGROUND | $494.00 | $473.00 | CLOW | 4 WEEKS |
| KENNEDY | $496.00 | $480.00 | KENNEDY | 8-10 WEEKS |

FORM DP2B 5-68

# CITY OF FORT WAYNE
## DEPARTMENT OF PURCHASES
FT. WAYNE, IND.

## INVITATION

Quotations, subject to the conditions on the reverse hereof, are requested on the following list of materials, supplies, equipment or services, for the department as mentioned, with delivery to destination as shown below. Quotations shall include all charges for delivery, packing, etc. Address your reply as indicated below.*



Ref. No. 765

Date DECEMBER 12, 19

Date wanted 1/7/86

*Mail all replies and correspondence, etc. to Att. of CAROL OFFERLE: 219-427-1101 DEPARTMENT OF PURCHASES

Address ONE MAIN STREET, ROOM 940, FORT WAYNE, INDIANA 46802

REQUIRED FOR DELIVERY TO:

Department or Division WATER MAINTENANCE & SERVICE

Address 415 E. WALLACE STREET
FORT WAYNE, INDIANA 46803

Fund Appropriation No. ____

RETURN ORIGINAL TO THE CITY — RETAIN DUPLICATE COPY FOR YOUR FILE

Closing Time of Bids TUESDAY, JANUARY 7, 1986 AT 10:30 A.M.

TAXES: THE CITY IS EXEMPT FROM FEDERAL EXCISE AND INDIANA STATE SALES TAX. THE CITY'S INDIANA SALES TAX EXEMPTION CERTIFICATE NUMBER IS NO. 34508. PRICES SHOULD NOT INCLUDE THESE TAXES. See "Instructions to Bidders" No. 10 on reverse hereof for details

**TAX EXEMPT** (Unless otherwise indicated)

| Quantity | Unit | Materials, Supplies, Equipment or Services | Unit Price | Tot Amo |
|---|---|---|---|---|
| | | PRICE PER EACH 5½' BURY FIRE HYDRANT $ 496.00 | | |
| | | (EST. QUANTITY OF 50 UNITS) TOTAL $ 24,800.00 | | |
| | | STATE BRAND NAME Kennedy Valve K-81A "Guardian" | | |
| | | PRICE PER EACH 4½' BURY FIRE HYDRANT $ 480.00 | | |
| | | (EST. QUANTITY OF 10 UNITS) TOTAL $ 4,800.00 | | |
| | | STATE BRAND NAME Kennedy Valve K-81A "Guardian" | | |
| | | FOB Ft. Wayne DELIVERY TIME AFTER RECEIPT OF ORDER 8-10 weeks | | |
| | | TERM OF AGREEMENT: MARCH 1, 1986 TO FEBRUARY 28, 1987 | | |
| | | AFFIRMATIVE ACTION: ON FILE X ATTACHED ____ | | |

Bid Bond required NO ☐ YES XXX FIVE PERCENT Performance Bond NO XXX ☐ YES ☐ NOT REQUIRED

See instruction item No. 16 on reverse side hereof.

Terms Net ___ % cash discount if paid within 30 days from delivery and acceptance of goods or completion of servic

## PROPOSAL OR BID

In compliance with the above invitation for bids and subject to all conditions thereof, the undersigned offers and agrees, if this bid be accepted within a reasona time from date of closing, to furnish any or all of the items or render such services upon which prices are quoted, in accordance with the specifications applying and at price set opposite each item.

Delivery of any or all of the items or completion of services indicated shall be made within * *56-70 days from receipt of ord

IMPORTANT ☞ As delivery may be a deciding factor in the award of an order, it is important that bidd furnish the information requested above.

Sign Here: Matthew D. Sylvan

Kennedy Valve/Div. of ITT Grinnell Corp.
Name of Company

Per Matthew D. Sylvan Title Director Marketing/Sale

1021 East Water Street
Address

Elmira, New York 14901 1-3-8

FORM DP2B 5-68

# CITY OF FORT WAYNE
## DEPARTMENT OF PURCHASES
FT. WAYNE, IND.

## INVITATION

Page 1 of 1

Ref. No. 765

Date DECEMBER 12, 19

Date wanted 1/7/86

Quotations, subject to the conditions on the reverse hereof, are requested on the following list of materials, supplies, equipment or services, for the department as mentioned, with delivery to destination as shown below. Quotations shall include all charges for delivery, packing, etc. Address your reply as indicated below.*

*Mail all replies and correspondence, etc. to Att. of CAROL OFFERLE: 219-427-1101 DEPARTMENT OF PURCHASES

Address ONE MAIN STREET, ROOM 940, FORT WAYNE, INDIANA 46802

REQUIRED FOR DELIVERY TO:

Department or Division WATER MAINTENANCE & SERVICE
415 E. WALLACE STREET

Address FORT WAYNE, INDIANA 46803

Fund Appropriation No.

RETURN ORIGINAL TO THE CITY — RETAIN DUPLICATE COPY FOR YOUR FILE

Closing Time of Bids TUESDAY, JANUARY 7, 1986 AT 10:30 A.M.

TAXES: THE CITY IS EXEMPT FROM FEDERAL EXCISE AND INDIANA STATE SALES TAX. THE CITY'S INDIANA SALES TAX EXEMPTION CERTIFICATE NUMBER IS NO. 34508. PRICES SHOULD NOT INCLUDE THESE TAXES. See "Instructions to Bidders" No. 10 on reverse hereof for details.

**TAX EXEMPT** (Unless otherwise indicated)

| Quantity | Unit | Materials, Supplies, Equipment or Services | Unit Price | Total Amount |
|---|---|---|---|---|
| | | PRICE PER EACH 5½' BURY FIRE HYDRANT $ 484.10 | | |
| | | (EST. QUANTITY OF 50 UNITS) TOTAL $ 24,205.00 | | |
| | | STATE BRAND NAME American-Darling | | |
| | | PRICE PER EACH 4½' BURY FIRE HYDRANT $ 469.05 | | |
| | | (EST. QUANTITY OF 10 UNITS) TOTAL $ 4,690.50 | | |
| | | STATE BRAND NAME American-Darling | | |
| | | FOB Ft. Wayne DELIVERY TIME AFTER RECEIPT OF ORDER 1-4 weeks | | |
| | | TERM OF AGREEMENT: MARCH 1, 1986 TO FEBRUARY 28, 1987 | | |
| | | AFFIRMATIVE ACTION: ON FILE X ATTACHED | | |

Bid Bond required NO ☐ YES ☒ FIVE PERCENT Performance Bond NO ☒ YES ☐ NOT REQUIRED

See instruction item No. 16 on reverse side hereof.

Terms ____ % cash discount if paid within ____ days from delivery and acceptance of goods or completion of servic

## PROPOSAL OR BID

In compliance with the above invitation for bids and subject to all conditions thereof, the undersigned offers and agrees, if this bid be accepted within a reason time from date of closing, to furnish any or all of the items or render such services upon which prices are quoted, in accordance with the specifications applying and at price set opposite each item.

Delivery of any or all of the items or completion of services indicated shall be made within ____ days from receipt of orc

IMPORTANT ☞ As delivery may be a deciding factor in the award of an order, it is important that bid furnish the information requested above.

Sign Here:

Water Products Company
Name of Company

Per Carden C. Gentes Title Office Mgr

Address 112 W. Water St., P.O. Box 55
Wabash, IN 46992

1/2/86

FORM DP2B 5-68

# CITY OF FORT WAYNE
## DEPARTMENT OF PURCHASES
FT. WAYNE, IND.

Page 1 of 1

Ref. No. 765

Date DECEMBER 12, 19

Date wanted 1/7/86

Fund Appropriation No.

## INVITATION

Quotations, subject to the conditions on the reverse hereof, are requested on the following list of materials, supplies, equipment or services, for the department as mentioned, with delivery to destination as shown below. Quotations shall include all charges for delivery, packing, etc. Address your reply as indicated below.*

*Mail all replies and correspondence, etc. to Att. of CAROL OFFERLE: 219-427-1101 DEPARTMENT OF PURCHASES

Address ONE MAIN STREET, ROOM 940, FORT WAYNE, INDIANA 46802

REQUIRED FOR DELIVERY TO:

Department or Division WATER MAINTENANCE & SERVICE

Address 415 E. WALLACE STREET
FORT WAYNE, INDIANA 46803

RETURN ORIGINAL TO THE CITY — RETAIN DUPLICATE COPY FOR YOUR FILE

Closing Time of Bids TUESDAY, JANUARY 7, 1986 AT 10:30 A.M.

TAXES: THE CITY IS EXEMPT FROM FEDERAL EXCISE AND INDIANA STATE SALES TAX. THE CITY'S INDIANA SALES TAX EXEMPTION CERTIFICATE NUMBER IS NO. 34508. PRICES SHOULD NOT INCLUDE THESE TAXES. See "Instructions to Bidders" No. 10 on reverse hereof for details.

**TAX EXEMPT** (Unless otherwise indicated)

| Quantity | Unit | Materials, Supplies, Equipment or Services | Unit Price | Tot Amo |
|---|---|---|---|---|
| | | PRICE PER EACH 5½' BURY FIRE HYDRANT $ 494.00 | | |
| | | (EST. QUANTITY OF 50 UNITS) TOTAL $ 24,700.00 | | |
| | | STATE BRAND NAME Clow F2500 | | |
| | | PRICE PER EACH 4½' BURY FIRE HYDRANT $ 473.00 | | |
| | | (EST. QUANTITY OF 10 UNITS) TOTAL $ 4,730.00 | | |
| | | STATE BRAND NAME Clow F2500 | | |
| | | FOB Fort Wayne DELIVERY TIME AFTER RECEIPT OF ORDER 4 Weeks | | |
| | | TERM OF AGREEMENT: MARCH 1, 1986 TO FEBRUARY 28, 1987 | | |
| | | AFFIRMATIVE ACTION: ON FILE X ATTACHED | | |

Bid Bond required NO ☐ YES XXX FIVE PERCENT Performance Bond ~~NO~~ XXX ☐ YES ☐ NOT REQUIRED

See instruction item No. 16 on reverse side hereof.

Terms 0 % cash discount if paid within Net 30 days from delivery and acceptance of goods or completion of servic

## PROPOSAL OR BID

In compliance with the above invitation for bids and subject to all conditions thereof, the undersigned offers and agrees, if this bid be accepted within a reason time from date of closing, to furnish any or all of the items or render such services upon which prices are quoted, in accordance with the specifications applying and at price set opposite each item.

Delivery of any or all of the items or completion of services indicated shall be made within 28 days from receipt of or

IMPORTANT ☞ As delivery may be a deciding factor in the award of an order, it is important that bid furnish the information requested above.

Sign Here:

UNDERGROUND PIPE + VALVE INC
Name of Company

Per James P. Butler Title President

Address PO BOX 508

City S.O. Bend Ind 46624 Date 12/31

# MBE/WBE STATEMENT

FOR
CITY OF FORT WAYNE, INDIANA

BID NO. 765
BID DATE: 1/7/86

The City is committed to minority/women's business participation, and the Citizens' Advisory Committee is presently preparing an ordinance concerning minority and women's business participation for City contracts. This project is also governed by various affirmative action requirements including Presidential Executive Order Number 11246. To assist the City in meeting its stated goals and to further meet affirmative action requirements, the undersigned commits _____percent (____%), as a goal, of the undersigned's total bid to minority/women's business participation. In that regard, the following MBE and/or WBE firms have been contacted to work as subcontractors:

| | Name of Firm | Type of Work |
|---|---|---|
| 1. | | |
| 2. | | |
| 3. | (* SEE ATTACHED LETTER) | |
| 4. | | |

Submitted on: Jan 7, 1986

By Underground Pipe + Valve Inc
(Company Name)

James P Butler
(Name & Title of Person Authorized to sign)

Business Address: _____

_____

_____

Phone Number: _____

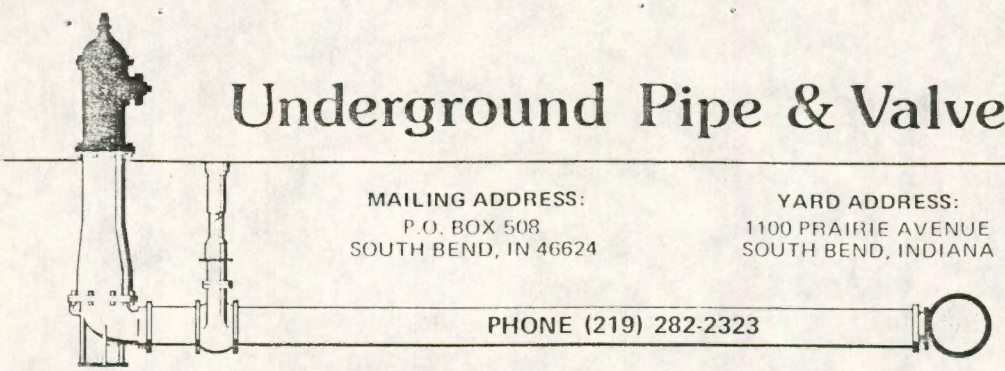

# Underground Pipe & Valve, Inc.

MAILING ADDRESS:
P.O. BOX 508
SOUTH BEND, IN 46624

YARD ADDRESS:
1100 PRAIRIE AVENUE
SOUTH BEND, INDIANA

PHONE (219) 282-2323

January 6, 1986

MBE - WBE

We at Undergound Pipe & Valve, Inc. are committed to goals for affirmative action, and currently on file with the City of Fort Wayne for same. We could not find any MBE - WBE in the immediate area who are in the waterworks wholesale supply or manufacturing business.

On December 30th, we called the office which handles MBE - WBE to ask if they had anyone on file. We were informed that they did not and advised us to state in a letter that there are not any MBE - WBE waterworks wholesalers or manufacturers in our immediate area. This letter is in compliance of that requested.

Yours very truly,

James P. Butler

James P. Butler

FORM DP2B 5-68

# CITY OF FORT WAYNE
## DEPARTMENT OF PURCHASES
FT. WAYNE, IND.

## INVITATION



Ref. No. 765

Date DECEMBER 12, 19

Date wanted 1/7/86

Fund Appropriation No. _____

Quotations, subject to the conditions on the reverse hereof, are requested on the following list of materials, supplies, equipment or services, for the department as mentioned, with delivery to destination as shown below. Quotations shall include all charges for delivery, packing, etc. Address your reply as indicated below.*

*Mail all replies and correspondence, etc. to Att. of CAROL OFFERLE: 219-427-1101 DEPARTMENT OF PURCHASES

Address ONE MAIN STREET, ROOM 940, FORT WAYNE, INDIANA 46802

REQUIRED FOR DELIVERY TO:

Department or Division WATER MAINTENANCE & SERVICE
415 E. WALLACE STREET
FORT WAYNE, INDIANA 46803

Address

RETURN ORIGINAL TO THE CITY — RETAIN DUPLICATE COPY FOR YOUR FILE

Closing Time of Bids TUESDAY, JANUARY 7, 1986 AT 10:30 A.M.

TAXES: THE CITY IS EXEMPT FROM FEDERAL EXCISE AND INDIANA STATE SALES TAX. THE CITY'S INDIANA SALES TAX EXEMPTION CERTIFICATE NUMBER IS NO. 34508. PRICES SHOULD NOT INCLUDE THESE TAXES. See "Instructions to Bidders" No. 10 on reverse hereof for details.

**TAX EXEMPT** (Unless otherwise indicated)

| Quantity | Unit | Materials, Supplies, Equipment or Services | Unit Price | Total Amount |
|---|---|---|---|---|
| | | PRICE PER EACH 5½' BURY FIRE HYDRANT $ 519.76 | | |
| | | (EST. QUANTITY OF 50 UNITS) TOTAL $ 25,988.00 | | |
| | | STATE BRAND NAME MUELLER CENTURION | | |
| | | PRICE PER EACH 4½' BURY FIRE HYDRANT $ 497.48 | | |
| | | (EST. QUANTITY OF 10 UNITS) TOTAL $ 4,974.80 | | |
| | | STATE BRAND NAME MUELLER CENTURION | | |
| | | FOB Factory with full freight allowed DELIVERY TIME AFTER RECEIPT OF ORDER 3-4 weeks | | |
| | | TERM OF AGREEMENT: MARCH 1, 1986 TO FEBRUARY 28, 1987 | | |
| | | When ordering, please refer to this quotation. | | |
| | | AFFIRMATIVE ACTION: ON FILE _____ ATTACHED X | | |

Bid Bond required NO ☐ YES XXX FIVE PERCENT Performance Bond XXX NO ☐ YES ☐ NOT REQUIRED

See instruction item No. 16 on reverse side hereof.

Terms 2 % cash discount if paid within 15th-30th XXXXXX days from delivery and acceptance of goods or completion of servic

## PROPOSAL OR BID

In compliance with the above invitation for bids and subject to all conditions thereof, the undersigned offers and agrees, if this bid be accepted within a reason time from date of closing, to furnish any or all of the items or render such services upon which prices are quoted, in accordance with the specifications applying and at price set opposite each item.

Delivery of any or all of the items or completion of services indicated shall be made within 45 days from receipt of or

IMPORTANT ☞ As delivery may be a deciding factor in the award of an order, it is important that bid furnish the information requested above.

Sign Here:

MUELLER CO. — Name of Company — Delmar Bagenski

Per Delmar Bagenski Title Sales Offic

Address 500 W. Eldorado St. Manager

Decatur, IL 62525

1-3-86 Date

FORM DP2B 5-68

# CITY OF FORT WAYNE
## DEPARTMENT OF PURCHASES
FT. WAYNE, IND.

## INVITATION

Page 1 of 1

Ref. No. 765

Date DECEMBER 12, 19

Date wanted 1/7/86

Quotations, subject to the conditions on the reverse hereof, are requested on the following list of materials, supplies, equipment or services, for the department as mentioned, with delivery to destination as shown below. Quotations shall include all charges for delivery, packing, etc. Address your reply as indicated below.*

*Mail all replies and correspondence, etc. to Att. of CAROL OFFERLE: 219-427-1101 DEPARTMENT OF PURCHASES

Address ONE MAIN STREET, ROOM 940, FORT WAYNE, INDIANA 46802

REQUIRED FOR DELIVERY TO:

Department or Division WATER MAINTENANCE & SERVICE

415 E. WALLACE STREET

Address FORT WAYNE, INDIANA 46803

Fund Appropriation No. ____

RETURN ORIGINAL TO THE CITY — RETAIN DUPLICATE COPY FOR YOUR FILE

Closing Time of Bids TUESDAY, JANUARY 7, 1986 AT 10:30 A.M.

TAXES: THE CITY IS EXEMPT FROM FEDERAL EXCISE AND INDIANA STATE SALES TAX. THE CITY'S INDIANA SALES TAX EXEMPTION CERTIFICATE NUMBER IS NO. 34508. PRICES SHOULD NOT INCLUDE THESE TAXES. See "Instructions to Bidders" No. 10 on reverse hereof for details.

**TAX EXEMPT** (Unless otherwise indicated)

| Quantity | Unit | Materials, Supplies, Equipment or Services | Unit Price | Tot. Amo |
|---|---|---|---|---|
| | | PRICE PER EACH 5½' BURY FIRE HYDRANT $ 460.56 | | |
| | | (EST. QUANTITY OF 50 UNITS) TOTAL $ 23.028.00 | | |
| | | STATE BRAND NAME Waterous WB/67 | | |
| | | PRICE PER EACH 4½' BURY FIRE HYDRANT $ 444.24 | | |
| | | (EST. QUANTITY OF 10 UNITS) TOTAL $ 4,442.40 | | |
| | | STATE BRAND NAME Waterous WB/67 | | |
| | | FOB So. St. Paul DELIVERY TIME AFTER RECEIPT OF ORDER 6 weeks | | |
| | | TERM OF AGREEMENT: MARCH 1, 1986 TO FEBRUARY 28, 1987 | | |
| | | AFFIRMATIVE ACTION: ON FILE ____ ATTACHED YES | | |

Bid Bond required NO ☐ YES ☒ FIVE PERCENT Performance Bond NO ☒ YES ☐ NOT REQUIRED

See instruction item No. 16 on reverse side hereof.

Terms NET 30 DAYS % cash discount if paid within ____ days from delivery and acceptance of goods or completion of servic

## PROPOSAL OR BID

In compliance with the above invitation for bids and subject to all conditions thereof, the undersigned offers and agrees, if this bid be accepted within a reasonable time from date of closing, to furnish any or all of the items or render such services upon which prices are quoted, in accordance with the specifications applying and at the price set opposite each item.

Delivery of any or all of the items or completion of services indicated shall be made within 45 days from receipt of orc

IMPORTANT ☞ As delivery may be a deciding factor in the award of an order, it is important that bidders furnish the information requested above.

Sign Here: David E. Doran

Waterous Company
Name of Company

Per David E. Doran Title Manager. Sale Order Processir

Address 300 John E. Carroll Ave. East

South St. Paul MN 55075 1/3/8

WATEROUS COMPANY
South St. Paul, Minnesota 55075



# PARTS MATERIAL DESCRIPTION

## WATEROUS PACER HYDRANTS

### Models W-67 and WB-67

| REF. NO. | DESCRIPTION | MATERIAL |
|---|---|---|
| 3 | O-ring packing | Buna-N |
| 5 | Flange gasket | Neoprene |
| 6 | Hex hd bolt, 5/8-11 x 3 in. | Cd-plated steel |
| 6A | Hex hd bolt, 5/8-11 x 3-3/4 in. | Cd-plated steel |
| 6B | Hex hd bolt, 5/8-11 x 3 in. | Cd-plated steel |
| 6C | Hex nut, 5/8-11 | Cd-plated steel |
| 7 | Drain plunger | Red brass |
| 8 | Cotter pin, 1/4 x 1-1/2 in. | Stainless steel, Type 304 |
| 9 | Nozzle cap chain, single or double | Zinc-plated steel |
| 10 | Nozzle cap, hose or pumper | Cast iron, Class 30 |
| 11 | Cap gasket | Neoprene |
| 12 | Nozzle, hose or pumper | Brass |
| 16 | Flat hd screw, 1/4-20 x 1/2 in. | Brass |
| 17A | Operating nut, lower | Bronze |
| 17B | Operating nut, upper | Cast iron, Class 30** |
| 25 | Valve-rod bushing | Red brass |
| 28 | Rod Assembly | Steel rod |
| 29 | Standpipe | Centrifugally cast ductile iron pipe* |
| 30 | Crossarm | Ductile iron |
| 31 | Valve seat | Bronze |
| 34 | Upper valve washer | Cast iron, Class 30 |
| 35 | Main valve | Nitrile |
| 36 | Lower valve washer | Cast iron, Class 30 |
| 37 | Hydrant bottom | Cast iron, Class 30 |
| 40 | Upper standpipe | Centrifugally cast ductile iron pipe* |
| 54 | Drain bushing | Brass |
| 56 | Support | Cast iron, Class 30 |
| 57 | O-ring packing | Buna-N |
| 59 | O-ring packing | Buna-N |
| 60 | Nozzle section | Cast iron, Class 30 |
| 61 | Bury depth plate | Aluminum |
| 61 | Bury depth plate washer | Cd-plated steel |
| 62 | Lock ring clamp | Malleable iron |
| 63 | Standpipe flange | Malleable iron |
| 64 | Flange lock ring | Stainless steel, Type 430 |
| 67 | Coupling sleeve (2 halves) | Cast iron |
| 71 | Upper rod assembly | Steel rod |
| 72 | Lower rod | Steel rod |
| 81 | Groove pin, 3/32 x 7/16 in. | Beryllium copper |
| 82 | Upper tube seal | Buna-N |
| 83 | Lower tube seal | Buna-N |
| 84 | Support gasket | Buna-N |
| 85 | Support tube | Cast iron |
| 86 | Stop nut | Cd-plated steel |
| 87 | Coupling nut | Brass |
| 88 | Coupling stud | Stainless steel, Type 430 |
| 89 | Operating nut bushing | Nylon |
| 90 | Thrust ring | Teflon |
| 91 | Pipe plug | Brass |
| 92 | Upper standpipe gasket | Neoprene |
| 99 | Pipe plug | Brass |
| 101 | Weathershield nut | Ductile iron |
| 102 | Pin | Stainless steel |
| 113 | Breakable flange | Ductile iron |

*AWWA Standard C-151-71 (ANSI 21.51.71)
**Bronze or ductile iron optional on some nut sizes.

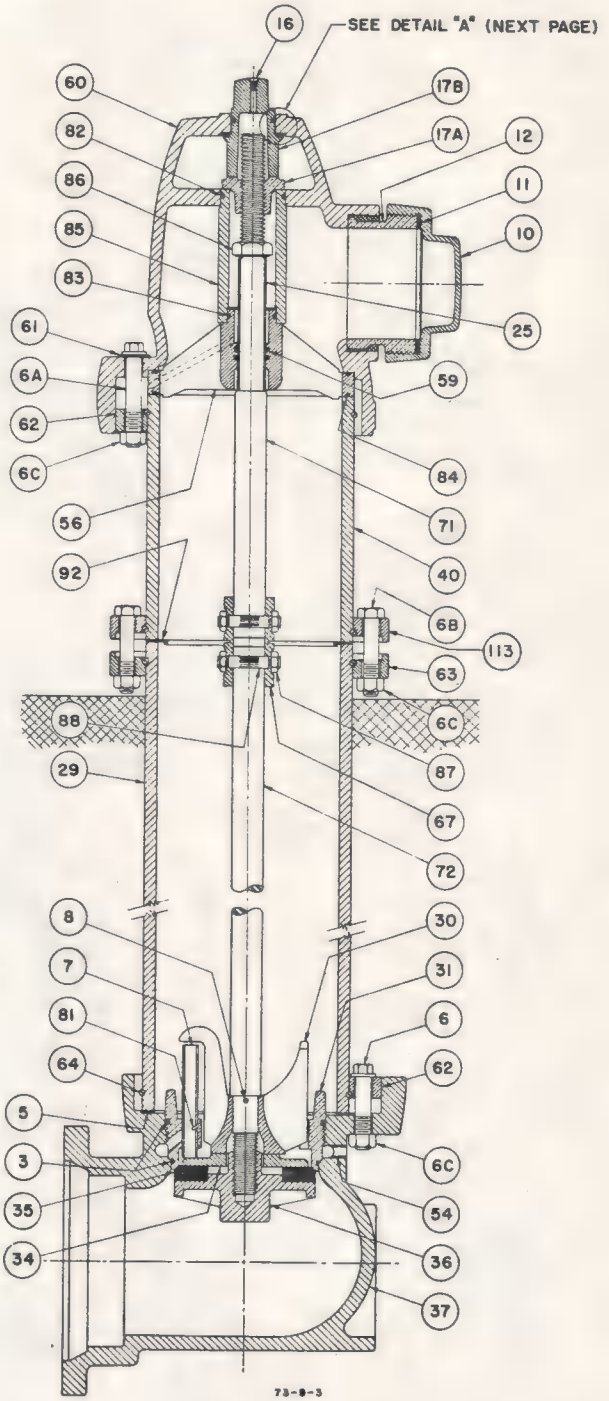

# PARTS MATERIAL DESCRIPTION

## WATEROUS PACER HYDRANTS

Models W-67 and WB-67

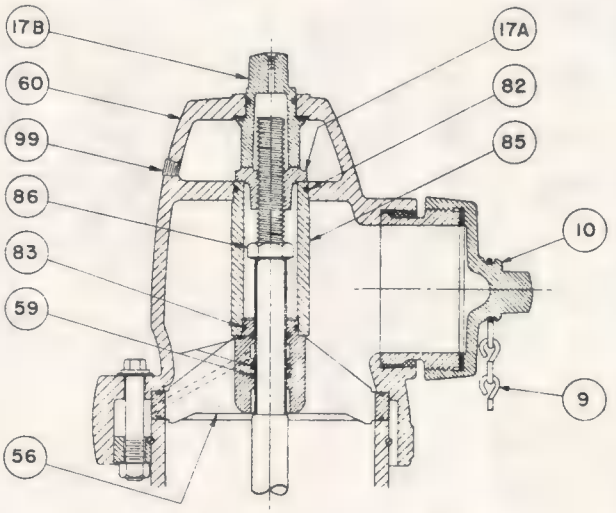


OPTIONAL OIL RESERVOIR

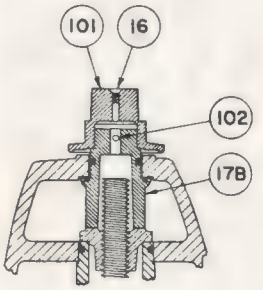


OPTIONAL
WEATHER SHIELD & NUT

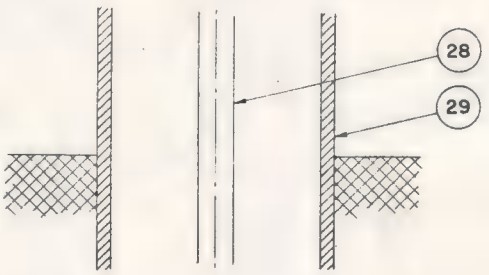


OPTIONAL NON-TRAFFIC (W67)
STANDPIPE & ROD

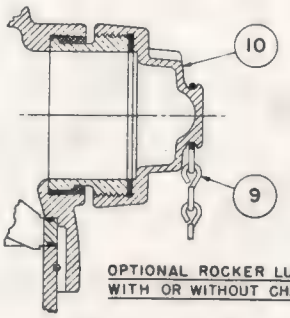


OPTIONAL ROCKER LUG CAP
WITH OR WITHOUT CHAIN

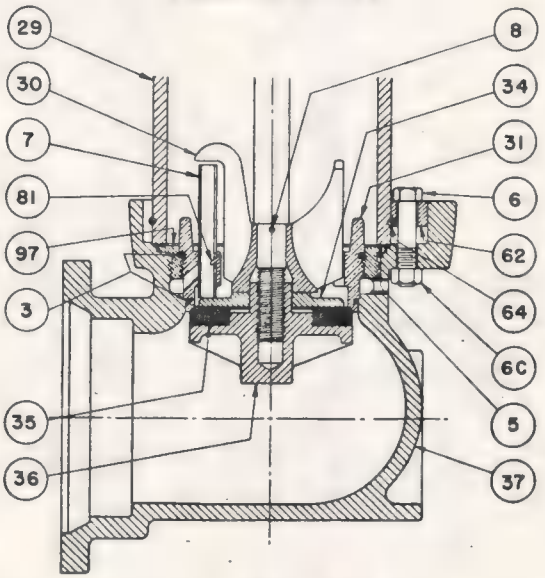


OPTIONAL BRONZE SEAT RING

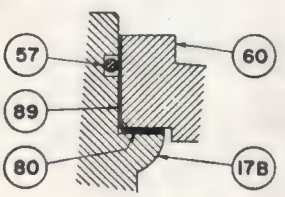


DETAIL "A"
PRIOR TO 1-1-70

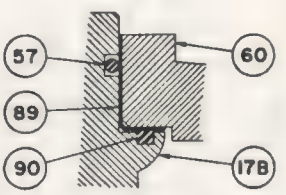


DETAIL "A"

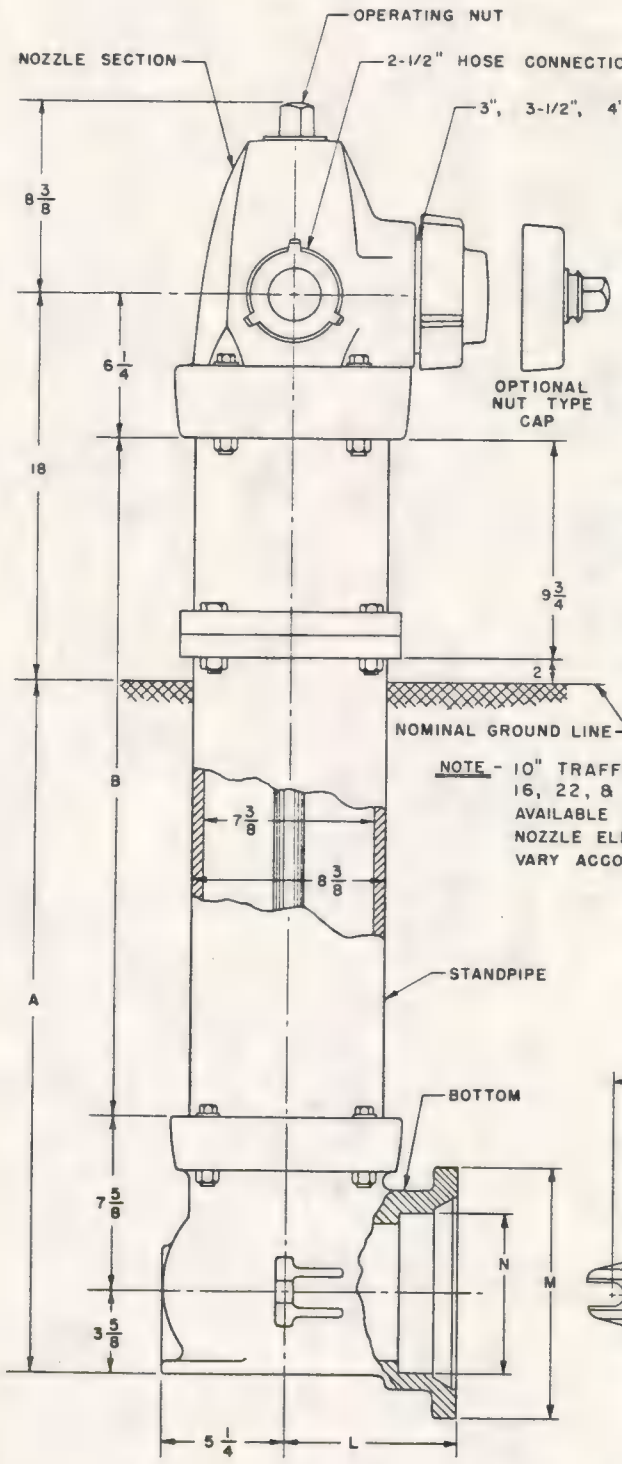


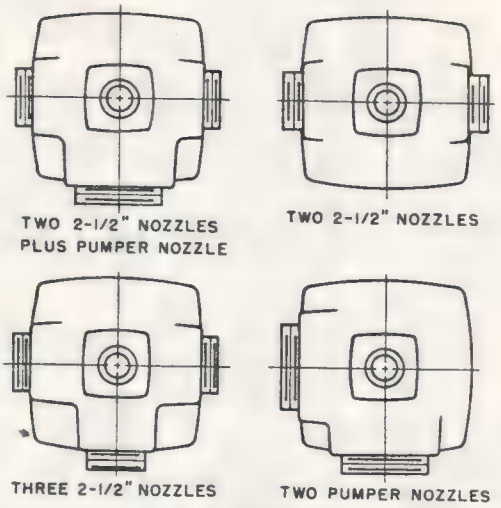


NOTE: NOZZLE SECTION MAY BE ROTATED TO ANY POSITION FROM THE ONE SHOWN

NOZZLE ARRANGEMENTS

NOTE - 10" TRAFFIC SECTION IS STANDARD 16, 22, & 28 TRAFFIC SECTIONS ARE AVAILABLE ON SPECIAL ORDER. NOZZLE ELEVATION WILL VARY ACCORDINGLY.

| BURY * | A | B |
|---|---|---|
| 1' - 6" | 1'-6 3/4" | 1'-7 1/4" |
| 2' - 0" | 2'-0 3/4" | 2'-1 1/4" |
| 2' - 6" | 2'-6 3/4" | 2'-7 1/4" |
| 3' - 0" | 3'-0 3/4" | 3'-1 1/4" |
| 3' - 6" | 3'-6 3/4" | 3'-7 1/4" |
| 4' - 0" | 4'-0 3/4" | 4'-1 1/4" |
| 4' - 6" | 4'-6 3/4" | 4'-7 1/4" |
| 5' - 0" | 5'-0 3/4" | 5'-1 1/4" |
| 5' - 6" | 5'-6 3/4" | 5'-7 1/4" |
| 6' - 0" | 6'-0 3/4" | 6'-1 1/4" |
| 6' - 6" | 6'-6 3/4" | 6'-7 1/4" |
| 7' - 0" | 7'-0 3/4" | 7'-1 1/4" |
| 7' - 6" | 7'-6 3/4" | 7'-7 1/4" |
| 8' - 0" | 8'-0 3/4" | 8'-1 1/4" |
| 8' - 6" | 8'-6 3/4" | 8'-7 1/4" |
| 9' - 0" | 9'-0 3/4" | 9'-1 1/4" |
| 9' - 6" | 9'-6 3/4" | 9'-7 1/4" |

* "BURY" IS THE NOMINAL DISTANCE FROM GROUND LINE TO BOTTOM OF CONNECTING PIPE

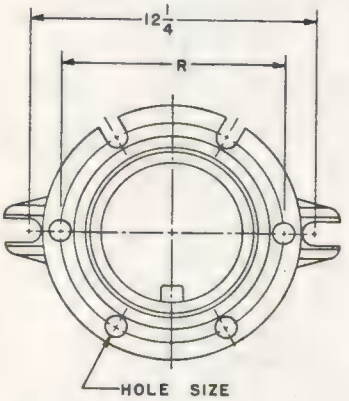


NOTE - PACER HYDRANT AVAILABLE WITH 5-1/4" VALVE OPENING ONLY.

| CONNECTING PIPE | L | M | N | R | NO. HOLES | HOLE SIZE |
|---|---|---|---|---|---|---|
| 6" PIPE | 7-3/4 | 11-1/16 | 7 | 9-1/2 | 6 | 7/8 |

NOTE - OPERATING NUT FURNISHED L.H. (COUNTER CLOCKWISE OPENING) OR R.H. (CLOCKWISE OPENING) IN FOLLOWING COMMON SIZES:

| | | | |
|---|---|---|---|
| 15/16 | PENTAGON | 7/8 | SQUARE |
| 1 1/8 | " | 1 | " |
| 1 7/32 | " | | |
| 1 5/16 | " | | |
| 1 1/2 | " | | |

DIMENSION AND SPECIFICATION SHEET
PACER TRAFFIC FLANGE HYDRANT
WITH MECHANICAL JOINT CONNECTION

REV. 5-79

PLATE 68-2-6-6

WATEROUS COMPANY
SOUTH ST. PAUL, MINNESOTA 55075

January, 1986

WATEROUS COMPANY

PRESENT EMPLOYMENT SUMMARY

| JOB CATEGORIES OR POSITIONS | ALL EMPLOYEES | | | MALE | | | | FEMALE | | | |
|---|---|---|---|---|---|---|---|---|---|---|---|
| | TOTAL | MALE | FEMALE | BLK | IND | SS | ORI | BLK | IND | SS | ORI |
| Officials and Managers | 27 | 24 | 3 | | | | | | | | |
| Professionals | 15 | 13 | 2 | | | | | | | | |
| Technicians | 20 | 10 | 10 | | | | | | | | |
| Sales Workers | 17 | 17 | | | | | | | | | |
| Office and Clerical | 19 | 1 | 18 | | | | | | | | |
| Craft Workers (Skilled) | 86 | 86 | | 1 | | 1 | | | | | |
| Operatives (Semi-Skilled) | 80 | 78 | 2 | | | | 5 | | | 1 | |
| Laborers (Unskilled) | 15 | 12 | 3 | | | | | | | | |
| Service Workers | 1 | 1 | | | | | | | | | |
| | | | | | | | | | | | |
| | | | | | | | | | | | |
| | | | | | | | | | | | |
| | | | | | | | | | | | |
| | | | | | | | | | | | |
| TOTAL | 280 | 242 | 38 | 1 | | 1 | 5 | | | 1 | |
| PERCENT REPRESENTATION | 100% | 86% | 14% | | | | 1% | | | | |

amhoist AMERICAN HOIST & DERRICK COMPANY

WATEROUS COMPANY
300 JOHN E. CARROLL AVENUE EAST
SOUTH SAINT PAUL, MINNESOTA 55075

January 3, 1986

The City of Fort Wayne
Department of Purchases
One Main Street, Room 940
Fort Wayne, Indiana 46802

Reference: Bid No. 765, The City of Fort Wayne

Gentlemen:

This is to advise that the Waterous Pacer fire hydrant, Model WB-67 being bid in response to the bid package referenced above, meets the performance and constructional requirements of AWWA C502-85 Standard for Dry-Barrel Fire Hydrants. In particular, all bronze and brass parts which are in constant contact with the water, and all flow characteristics of the Model WB-67 hydrant meet or exceed the requirements of that Standard.

We have reviewed your Specifications for Fire Hydrants on page 10 of 17 of the bid package and note the following.

1. The main valve assembly of the Model WB-67 hydrant, including the drain valve assembly, can be removed out of the top of the hydrant barrel when the nozzle section is removed.

2. The hose and pumper nozzles are mechanically attached to the nozzle section. The nozzles have external lugs which mate with recesses in the nozzle section casting. The nozzles are inserted axially, rotated clockwise to a positive stop, withdrawn axially outward into anti-rotation recesses, and securely held in place by threaded retainers. O-ring seals are clamped by the retainer to provide sealing.

We submit these comments for your consideration per Item 7 of the General Conditions, Instructions to Bidders and Information for Bidders on page 2 of 17 of the bid package. Further details of hydrant construction are shown on drawing 81447, materials of construction are listed on H-272-5 and dimensional information is shown on plate 68-2-6-6, copies attached.

Sincerely,

WATEROUS COMPANY

Heinz E. Otte
Vice President and Chief Engineer

HEO:jm

cc: Jim Blan, Waterous Regional Sales Manager

7218

# DIGEST SHEET

**TITLE OF ORDINANCE:** SPECIAL

**DEPARTMENT REQUESTING ORDINANCE:** PURCHASING

S-86-02-12

**SYNOPSIS OF ORDINANCE:**

AN ORDINANCE APPROVING CITY UTILITIES PURCHASE ORDER #A-52555 WITH RESPECT TO THE PURCHASE OF FIRE HYDRANTS FOR THE WATER MAINTENANCE AND SERVICE DEPARTMENT PER THE SPECIFICATIONS IN REFERENCE #765.

**EFFECT OF PASSAGE:**

CITY WOULD BE ABLE TO REPLACE OBSOLETE FIRE HYDRANTS.

**EFFECT OF NON-PASSAGE:**

HYDRANTS WOULD NOT WORK AS REPLACEMENT PARTS FOR OLD, OUT OF DATE HYDRANTS CANNOT BE PURCHASED.

**MONEY INVOLVED (Direct costs, Expenditures, Savings):**

| | | |
|---|---|---|
| WATER PRODUCTS | $28,895.50 | #A-52555 |

**ASSIGNED TO COMMITTE (President):**

BILL NO. S-86-02-12

REPORT OF THE COMMITTEE ON CITY UTILITIES

WE, YOUR COMMITTEE ON CITY UTILITIES TO WHOM WAS REFERRED AN (ORDINANCE) (~~RESOLUTION~~) approving City Utilities Purchase Order #A-52555, by the City of Fort Wayne, Indiana, by and its Department of Purdhasing and the Water Products Company, for the Water and Maintenance Service Department

HAVE HAD SAID (ORDINANCE) (~~RESOLUTION~~) UNDER CONSIDERATION AND BEG LEAVE TO REPORT BACK TO THE COMMON COUNCIL THAT SAID (ORDINANCE) (~~RESOLUTION~~)

| YES | | NO |
|---|---|---|
| | PAUL M. BURNS<br>CHAIRMAN | |
| | THOMAS C. HENRY<br>VICE CHAIRMAN | |
| | BEN A. EISBART | |
| | JAMES S. STIER | |
| | MARK E. GiaQUINTA | |

CONCURRED IN 2-25-86

SANDRA E. KENNEDY
CITY CLERK